HCA & HCA-RA SERIES

Hermetically Sealed AC LVDT

SPECIFICATIONS

- **Hermetically sealed, all welded**
- **Stainless steel housing**
- **MS type connector, glass sealed**
- **Axial or radial electrical connection**
- **IEC IP68 rating to 1,000 PSI [70 bars]**
- **Stroke ranges from ± 0.05 to ±10 inches**
- **AC operation from 400Hz to 10kHz**
- **Double magnetic shielding**
- **Through bore design (HCA-RA version)**

The **HCA and HCA-RA Series** hermetically sealed LVDTs provide premium performance in harsh industrial environments. Impervious to dirt, water, steam, and corrosive liquids/vapors compatible with its materials, the HCA/HCA-RA all-welded stainless steel construction withstands external pressures up to 1,000 PSI [70 bars]. Double magnetic shielding offers excellent protection from external electromagnetic fields.

The HCA/HCA-RA Series can be configured with a number of standard options. A high temperature operation (200ºC) model, HCA-T is also available. The HCA/HCA-RA is compatible with the full line of Measurement Specialties LVDT signal conditioners.

The HCA-RA version adds the convenience of a radial connector termination. This feature decreases the required installation space, while also allowing debris to harmlessly pass through the 'open-ended' bore.

Like in most of our LVDTs, the HCA/HCA-RA windings are vacuum impregnated with a specially formulated, high temperature, flexible resin, and the coil assembly is potted inside its housing with a two-component epoxy. This provides excellent protection against hostile environments such as high vibration and shock.

Captive core option: The HCA/HCA-RA features an optional captive core design that greatly simplifies installation. The core rod and bearing assembly includes a Bronze bearing on the front end for self-alignment, while a PTFE sleeve allows low-friction travel through the stainless steel boreliner (spool tube). The core rod and the bearing assembly are both field serviceable.

Also see our other hermetically sealed LVDT models with built-in signal conditioning: **HCD** (DC voltage), **HCT** (4-20mA, 2-wire loop) and **HC-485** (RS-485 Digital Series).

FEATURES

- All-welded stainless steel construction
- Glass sealed, MS type connector (MIL-C-5015)
- Shock and vibration tolerant
- Captive core eases installation (optional)
- High temperature version available (200ºC)
- Calibration certificate supplied with each unit
- Right angle (HCA-RA) version available

APPLICATIONS

- Harsh industrial environments
- Submersible (with appropriate connector)
- Pressure vessels
- Corrosive liquid and vapor areas (check materials)
- Mild radiation areas
- Turbine valve

PERFORMANCE SPECIFICATIONS

ELECTRICAL SPECIFICATIONS										
Parameter	**HCA HCA-RA 050**	**HCA HCA-RA 125**	**HCA HCA-RA 250**	**HCA HCA-RA 500**	**HCA HCA-RA 1000**	**HCA HCA-RA 2000**	**HCA HCA-RA 3000**	**HCA HCA-RA 4000**	**HCA HCA -RA 5000**	**HCA HCA-RA 10000**
Stroke range	±0.050 [±1.27]	±0.125 [±3.17]	±0.25 [±6.35]	±0.5 [±12.7]	±1 [±25.4]	±2 [±50.8]	±3 [±76.2]	±4 [±101.6]	±5 [±127]	±10 [±254]
Sensitivity V/V/inch mV/V/mm	4.2 [165]	2.4 [94.5]	1.6 [63.0]	1.1 [43.3]	0.84 [33.1]	0.32 [12.6]	0.20 [7.9]	0.18 [4.6]	0.16 [6.3]	0.13 [5.1]
Output at stroke ends, mV/V *(*)*	210	300	400	550	840	640	600	720	800	1,300
Phase shift	+6°	+5°	+5°	+2°	+1°	-1°	+1°	+3°	-5°	-6°
Input impedance (PRIMARY)	430Ω	1710Ω	800Ω	900Ω	900Ω	525Ω	930Ω	1000Ω	1200Ω	930Ω
Output impedance (SECONDARY)	950Ω	1820Ω	940Ω	1150Ω	2100Ω	535Ω	1040Ω	580Ω	1640Ω	3000Ω
Non-linearity	±% of FR									
@100% stroke (maximum)	**0.25**	**0.25**	**0.25**	**0.25**	**0.25**	**0.25**	**0.25**	**0.25**	**0.25**	**0.25**
@125% stroke	0.25	0.25	0.30	0.30	0.35	0 .40 *(**)*	0 .50	/	0 .80	0.90 *(**)*
@150% stroke	0.50	0.50	0.50	0.55 *(**)*	0 .55 *(**)*	0 .70 *(**)*	1.00 *(**)*	/	/	/
Input voltage	3 VRMS sine wave									
Input frequency	400Hz to 10kHz									
Test frequency	2.5kHz									
Null voltage	0.5% of FRO, maximum									

ENVIRONMENTAL SPECIFICATIONS & MATERIALS	
Operating temperature	-65°F to +300°F [-55°C to 150°C]
Shock survival	1,000 g (11ms half-sine)
Vibration tolerance	20 g up to 2kHz
Housing material	AISI 400 Series stainless steel
Electrical connector	6-pin MS type connector (MIL-C-5015)
IEC 60529 rating	IP68 to 1,000 PSI [70 bars] with use of proper mating connector plug

Notes
All values are nominal unless otherwise noted
Electrical specifications are for the test frequency indicated in the table
Dimensions are in inch [mm] unless otherwise noted
FR: Full Range is the stroke range, end to end; FR=2xS for ±S stroke range
FRO (Full Range Output): Algebraic difference in outputs measured at the ends of the range
(*) Unit for output at stroke ends is millivolt per volt of excitation (input voltage)
(**) Requires special reduced core length

MECHANICAL SPECIFICATIONS – NON CAPTIVE CORE (STANDARD)

Parameter	HCA HCA-RA 050	HCA HCA-RA 125	HCA HCA-RA 250	HCA HCA-RA 500	HCA HCA-RA 1000	HCA HCA-RA 2000	HCA HCA-RA 3000	HCA HCA-RA 4000	HCA HCA-RA 5000	HCA HCA-RA 10000
Body length "A"	1.66 [42.2]	2.50 [63.5]	3.36 [85.3]	5.05 [128.3]	7.29 [185.2]	10.68 [271.3]	15.76 [400.3]	16.17 [410.7]	19.70 [500.4]	33.82 [859.0]
Core length "B"	0.59 [15.0]	1.10 [27.9]	1.80 [45.7]	3.00 [76.2]	3.80 [96.5]	5.30 [134.6]	6.20 [157.5]	6.20 [157.5]	6.20 [157.5]	12.00 [304.8]
Bore depth "C" **HCA** only	1.07 [27.2]	1.91 [48.5]	2.77 [70.4]	4.46 [113.3]	6.72 [170.7]	10.20 [259.1]	15.17 [385.3]		19.12 [485.6]	33.23 [844.0]
Core center at null "P"	0.55 [14.0]	0.96 [24.4]	1.39 [35.3]	2.23 [56.6]	3.32 [84.3]	4.91 [124.7]	7.59 [192.8]	7.87 [199.9]	9.56 [242.8]	16.61 [421.9]
HCA body weight oz [g]	1.20 [34]	1.73 [49]	2.22 [63]	2.93 [83]	5.22 [148]	5.65 [160]	8.33 [236]	8.50 [241]	10.31 [292]	18.57 [526]
HCA-RA body weight, oz [g]	2.26 [64]	2.79 [79]	3.28 [93]	3.98 [113]	6.28 [178]	6.70 [190]	9.38 [266]	9.60 [272]	11.35 [322]	19.61 [556]
Core weight oz [g]	0.07 [2]	0.11 [3]	0.14 [4]	0.28 [8]	0.39 [11]	0.46 [13]	0.60 [17]	0.60 [17]	0.60 [17]	0.85 [24]

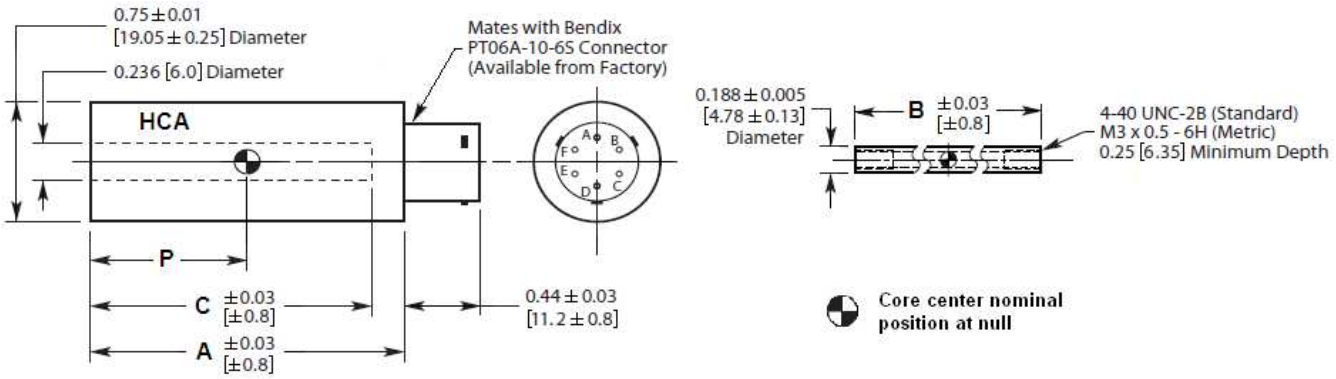

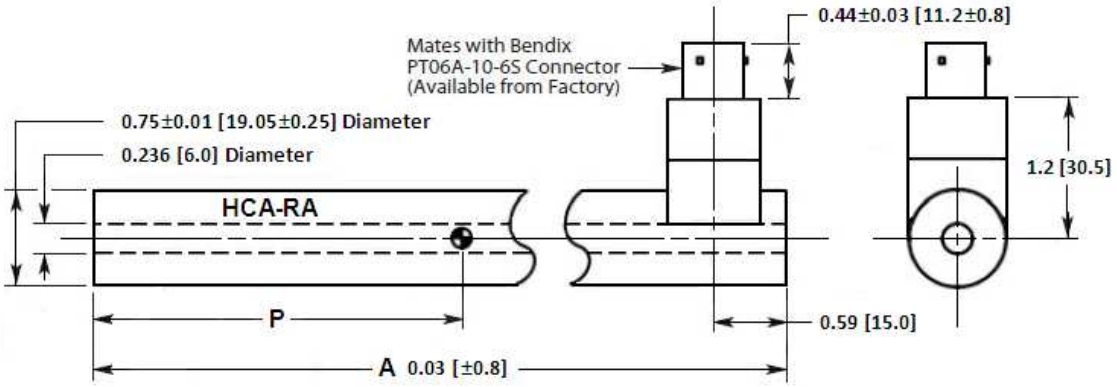

Dimensions are in inch [mm]

MECHANICAL SPECIFICATIONS – CAPTIVE CORE OPTION

Parameter	HCA/HCA-RA 050	HCA/HCA-RA 125	HCA/HCA-RA 250	HCA/HCA-RA 500	HCA/HCA-RA 1000	HCA/HCA-RA 2000	HCA/HCA-RA 3000
Body length "A"	2.00 [50.8]	2.84 [72.1]	3.70 [94.0]	5.39 [136.9]	7.63 [193.8]	11.02 [279.9]	16.10 [408.9]
Core center at null "P"	0.89 [22.6]	1.30 [33.0]	1.73 [43.9]	2.57 [65.3]	3.66 [93.0]	5.39 [136.9]	7.93 [201.4]
Core rod position at null "R"	3.70 [94.0]	4.28 [108.7]	4.75 [120.6]	6.04 [153.4]	7.90 [200.7]	10.52 [267.2]	15.27 [387.9]
Weight, oz [grams]	1.98 [56]	2.61[74]	3.14 [89]	4.06 [115]	6.63 [188]	7.37 [209]	10.62 [301]

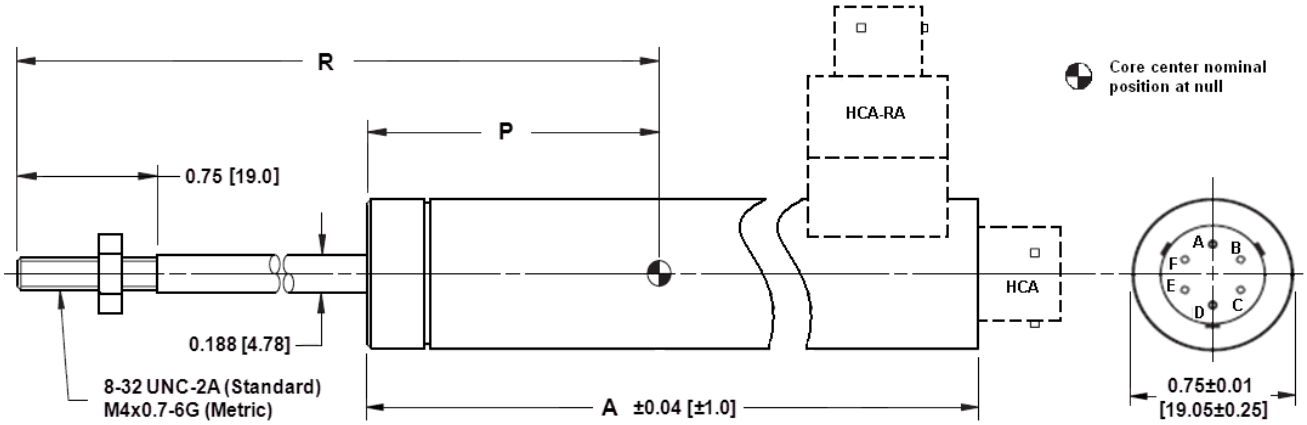

Dimensions are in inch [mm]

WIRING INFORMATION

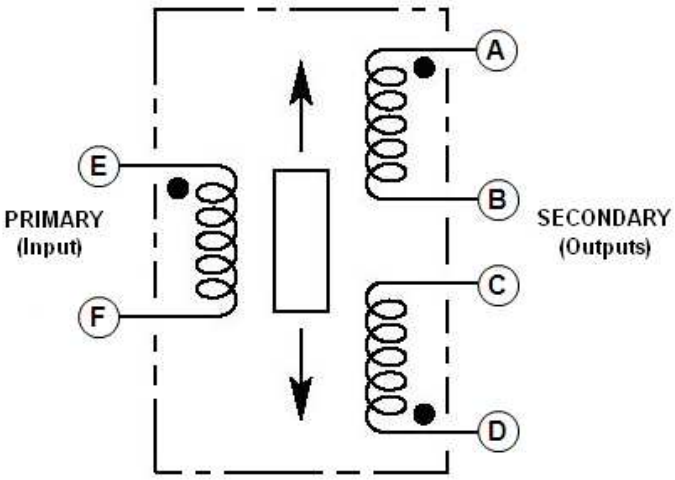

A through F: Connector pin assignments
Connect B to C for differential output

ORDERING INFORMATION

Description	HCA Model	Part Number
±0.050 inch LVDT	HCA 050	02560413-000
±0.125 inch LVDT	HCA 125	02560414-000
±0.25 inch LVDT	HCA 250	02560415-000
±0.5 inch LVDT	HCA 500	02560416-000
±1 inch LVDT	HCA 1000	02560417-000
±2 inch LVDT	HCA 2000	02560418-000
±3 inch LVDT	HCA 3000	02560419-000
±4 inch LVDT	HCA 4000	72560000-000
±5 inch LVDT	HCA 5000	02560420-000
±10 inch LVDT	HCA 10000	02560421-000

Description	HCA-RA Model	Part Number
±0.050 inch LVDT	HCA-RA 050	02560413-500
±0.125 inch LVDT	HCA-RA 125	02560414-500
±0.25 inch LVDT	HCA-RA 250	02560415-500
±0.5 inch LVDT	HCA-RA 500	02560416-500
±1 inch LVDT	HCA-RA 1000	02560417-500
±2 inch LVDT	HCA-RA 2000	02560418-500
±3 inch LVDT	HCA-RA 3000	02560419-500
±4 inch LVDT	HCA-RA 4000	72560000-500
±5 inch LVDT	HCA-RA 5000	02560420-500
±10 inch LVDT	HCA-RA 10000	02560421-500

OPTIONS		
Description	**Comments**	**Part Number**
5.0 kHz calibration	HCA/HCA-RA 050 through HCA/HCA-RA 500 only	XXXXXXXX-002
10 kHz calibration		XXXXXXXX-003
Metric threaded core (Non-captive) or connecting rod (Captive core)	All	XXXXXXXX-006
Guided core	Available on non-captive core models only	XXXXXXXX-010
Small-diameter/low-mass core *(consult factory for mass and dimensions)*		XXXXXXXX-020
Captive core	HCA/HCA-RA 050 through HCA-RA 3000 only	XXXXXXXX-200

Note: Add multiple option dash numbers together to determine proper ordering suffix
Example: HCA-RA 1000, ±1 inch, right angle connector model, with captive core and 5 kHz calibration, P/N 0256417-702

ACCESSORIES FOR HCA AND HCA-RA		
Description	**Comments**	**Part Number**
Core connecting rod, 6 inches long, 4-40 threads		05282946-006
Core connecting rod, 12 inches long, 4-40 threads		05282946-012
Core connecting rod, 24 inches long, 4-40 threads		05282946-024
Core connecting rod, 36 inches long, 4-40 threads		05282946-036
Core connecting rod, 6 inches long, M3x0.5 metric threads		05282977-006
Core connecting rod, 12 inches long, M3x0.5 metric threads		05282977-012
Mounting block		04560950-000
Mating connector kit	PT06A-10-6S(SR)	62101011-000
Interconnect cable for LVM-110 and LiM 4-20 Signal Conditioners *(1)*	HCA/HCA-RA to Stripped/Tinned	04290417-000
Interconnect cable for IEM-422 Signal Conditioner *(1)*	HCA/HCA-RA to PTO6A-10-6P	04290133-000
Interconnect cable for ATA-2001 Signal Conditioner *(1)*	HCA/HCA-RA to DB-9P	04290457-000
Interconnect cable for MP-2000 Series Set-Point Controller *(1)*	HCA/HCA-RA to 05BL5M	04290560-000
Interconnect cable for LDM/PML-1000 Signal Conditioners, **200°C** *(1)*	HCA/HCA-RA to Stripped/Tinned	04290595-000

(1) All cables are shielded, 10 foot long, and rated 80°C [176°F] operating unless otherwise noted. Consult factory for other lengths.

NORTH AMERICA

Measurement Specialties, Inc.,
a TE Connectivity Company
1000 Lucas Way
Hampton, VA 23666
United States
Phone: +1-800-745-8008
Fax: +1-757-766-4297
Email: customercare.hmpt@te.com

EUROPE

MEAS Deutschland GmbH (Europe)
a TE Connectivity Company
Hauert 13
D-44227 Dortmund
Germany
Phone: +49-(0)231-9740-0
Fax: +49-(0)231-9740-20
Email: customercare.dtmd@te.com

ASIA

Measurement Specialties (China), Ltd.,
a TE Connectivity Company
No. 26 Langshan Road
Shenzhen High-Tech Park (North)
Nanshan District, Shenzhen 518057
China
Phone: +86-755-33305088
Fax: +86-755-33305099
Email: customercare.shzn@te.com

TE.com/sensorsolutions

Measurement Specialties, Inc., a TE Connectivity company.

Accustar, American Sensor Technologies, AST, ATEXIS, DEUTSCH, IdentiCal, TruBlue, KPSI, Krystal Bond, Microfused, UltraStable, Measurement Specialties, MEAS, Schaevitz, TE Connectivity, TE, and the TE connectivity (logo) are trademarks of the TE Connectivity Ltd. family of companies. Other logos, product and company names mentioned herein may be trademarks of their respective owners.

The information given herein, including drawings, illustrations and schematics which are intended for illustration purposes only, is believed to be reliable. However, TE Connectivity makes no warranties as to its accuracy or completeness and disclaims any liability in connection with its use. TE Connectivity's obligations shall only be as set forth in TE Connectivity's Standard Terms and Conditions of Sale for this product and in no case will TE Connectivity be liable for any incidental, indirect or consequential damages arising out of the sale, resale, use or misuse of the product. Users of TE Connectivity products should make their own evaluation to determine the suitability of each such product for the specific application.

© 2015 TE Connectivity Ltd. family of companies All Rights Reserved.