Load Cell - AL6B Series

VARIOHM EUROSENSOR

- Aluminium-Alloy IP65 single point load cell
- Colourless anodized
- Suitable for pricing scales, bench scales, etc.
- Maximum platform size: 200 x 200 mm

Capacity	Accuracy	Part-Number
0.3 kg	L/H	AL6B-L/H-0.3kg-0.4B
0.6 kg	L/H	AL6B-L/H-0.6kg-0.4B
1.0kg	L/H	AL6B-L/H-1.0kg-0.4B
1.2 kg	L/H	AL6B-L/H-1.2kg-0.4B
1.5 kg	L/H	AL6B-L/H-1.5kg-0.4B
3.0 kg	L/H	AL6B-L/H-3.0kg-0.4B

Specification

Accuracy class		L	H
Output sensitivity (= FS)	mV/V	0.9 ± 0.1	
Maximum capacity (E_{max})	kg	0.3, 0.6, 1.0, 1.2, 1.5, 3	
Linearity	%FS	≤± 0.015	≤± 0.012
Hysteresis	FS	≤± 0.015	≤± 0.012
Repeatability	%FS	≤± 0.015	≤± 0.012
Temperature effect on minimum dead load output	%FS/10°C	≤± 0.030	≤± 0.020
Creep error (2 minutes)	%FS	≤± 0.010	≤± 0.005
Eccentric loading error	%	≤± 0.0200	
Minimum dead load	Of Emax	0%	
Safe overload	Of Emax	120 %	
Ultimate overload	Of Emax	150 %	
Zero balance	of FS	< ± 2.0 %	
Excitation, recommended voltage	V	5 ~ 12	
Excitation maximum	V	18	
Input resistance	Ω	406 ± 6	
Output resistance	Ω	350 ± 3	
Insulation resistance	MΩ	≥5000 (at 50VDC)	
Compensated temperature	°C	-10…+40	
Operating temperature	°C	-20…+50	
Storage temperature	°C	-30…+60	
Element material		Aluminium	
Ingress Protection (acc. to EN 60529)		IP65	

Outline dimensions in mm

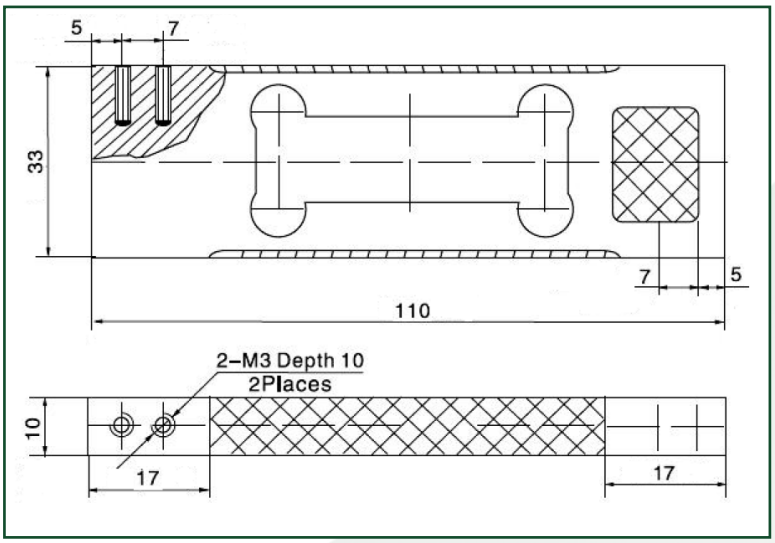

Wiring

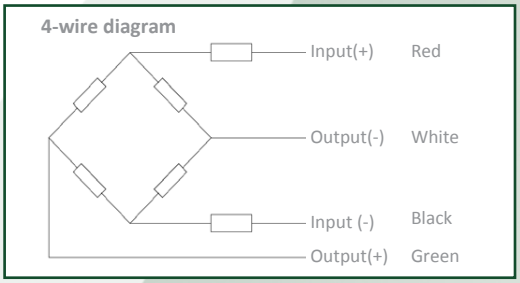

- Shielded, 4 conductor cable
- Cable diameter: Ø3mm
- Standard cable length: 0.40m
- Shield not connected to element
- Cable jacket in PVC

VARIOHM HOLDINGS

Variohm EuroSensor - Williams' Barn - Tiffield Road -Towcester - Northants -NN12 6HP - UK
sales@variohm.com • www.variohm.com • +44 (0) 1327 351004

Subject to change without notice